J & D Company, LLC
(800) 444-4532

SRK-L-49 144 024 BK-09

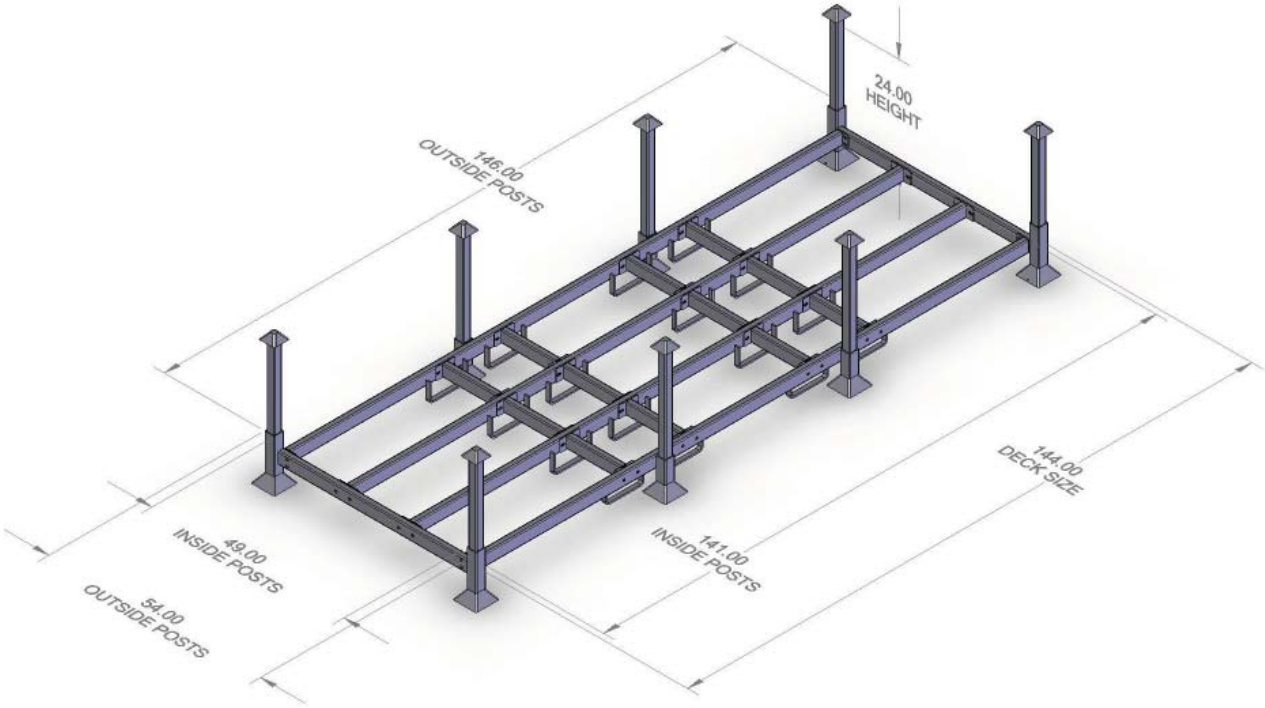

- Move & store materials
- Reduce labor, handling and damages
- Can stack top deck to 16’ height
- Different length legs available
- Use your cubic space
- PVC, conduit, molding, composite decking
- Capacity 4000 lbs.
- Shipping weight 400 lbs.

THINK CUBE SPACE FOR PROFIT

J & D Company, LLC
(800) 444-4532

SRK-L-49 192 024 BK-09

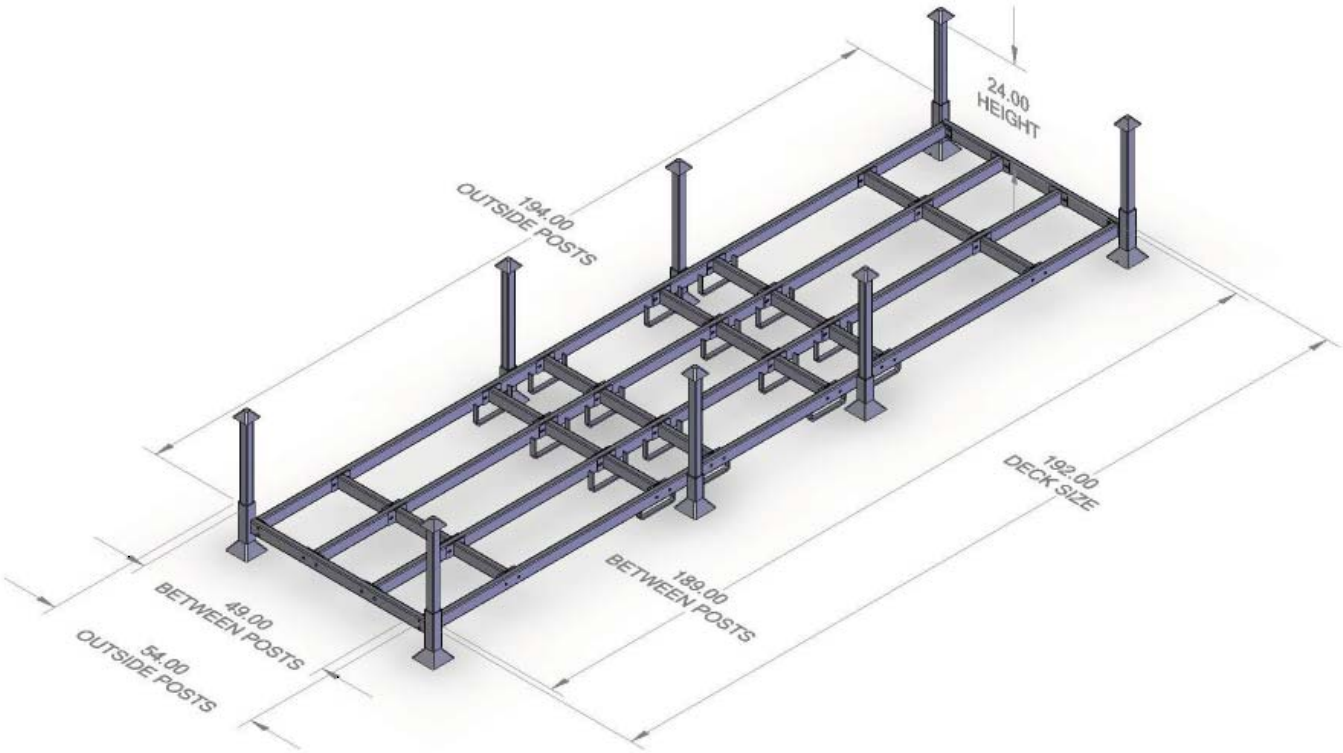

- Move & store materials
- Reduce labor, handling and damages
- Can stack top deck to 16’ height
- Different length legs available
- Use your cubic space
- PVC, conduit, molding, composite decking
- Capacity 4000 lbs.
- Shipping weight 480 lbs.

THINK CUBE SPACE FOR PROFIT

J & D Company, LLC
(800) 444-4532

SRK-L-49 230 024 BK-09

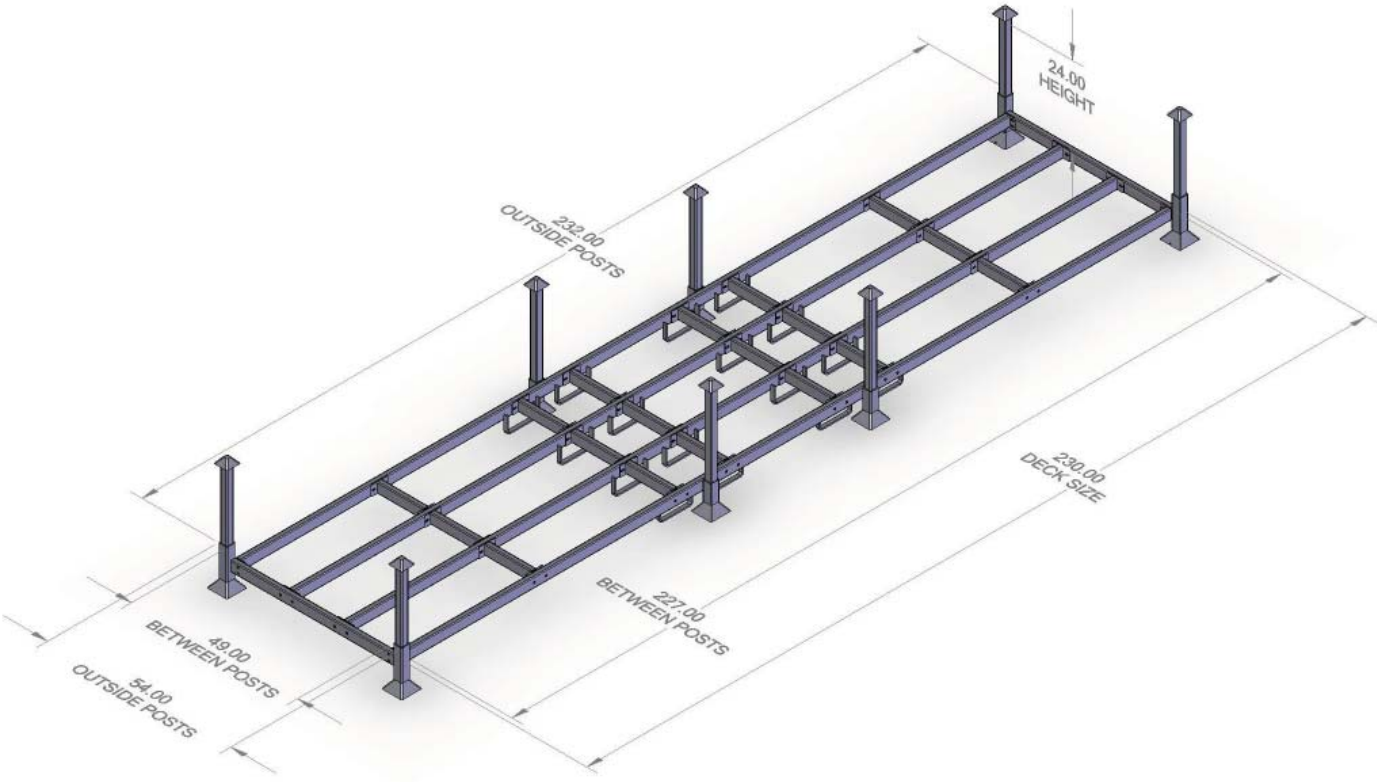

- Move & store materials
- Reduce labor, handling and damages
- Can stack top deck to 16’ height
- Different length legs available
- Use your cubic space
- PVC, conduit, molding, composite decking
- Capacity 4000 lbs.
- Shipping weight 525 lbs.

THINK CUBE SPACE FOR PROFIT